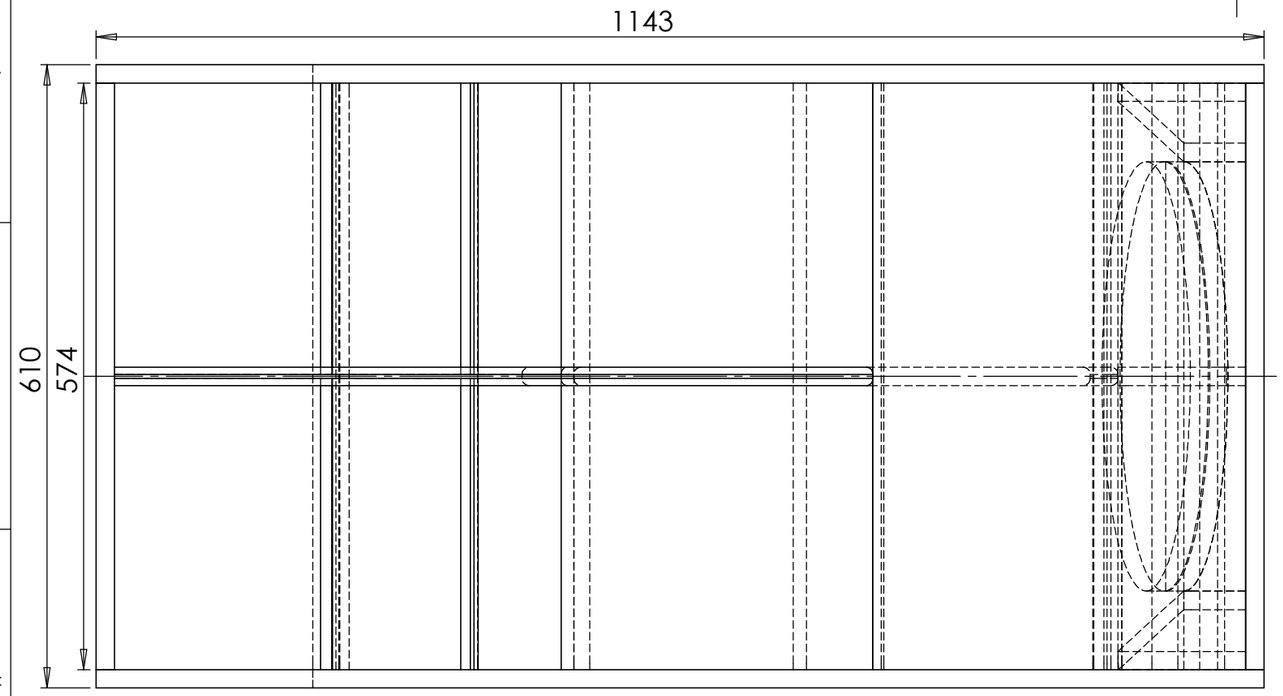

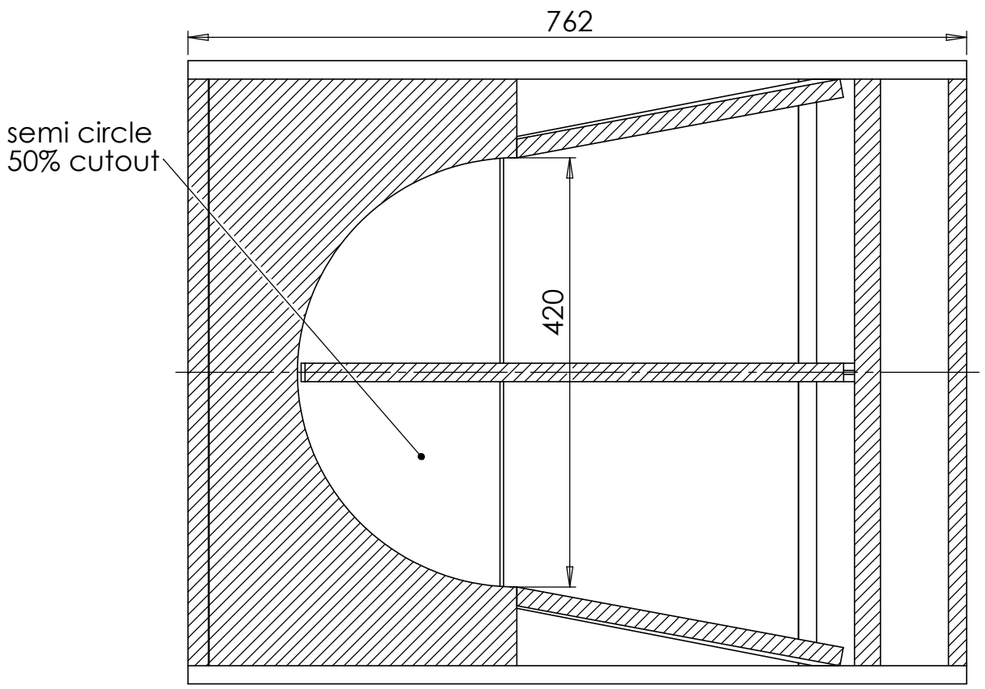

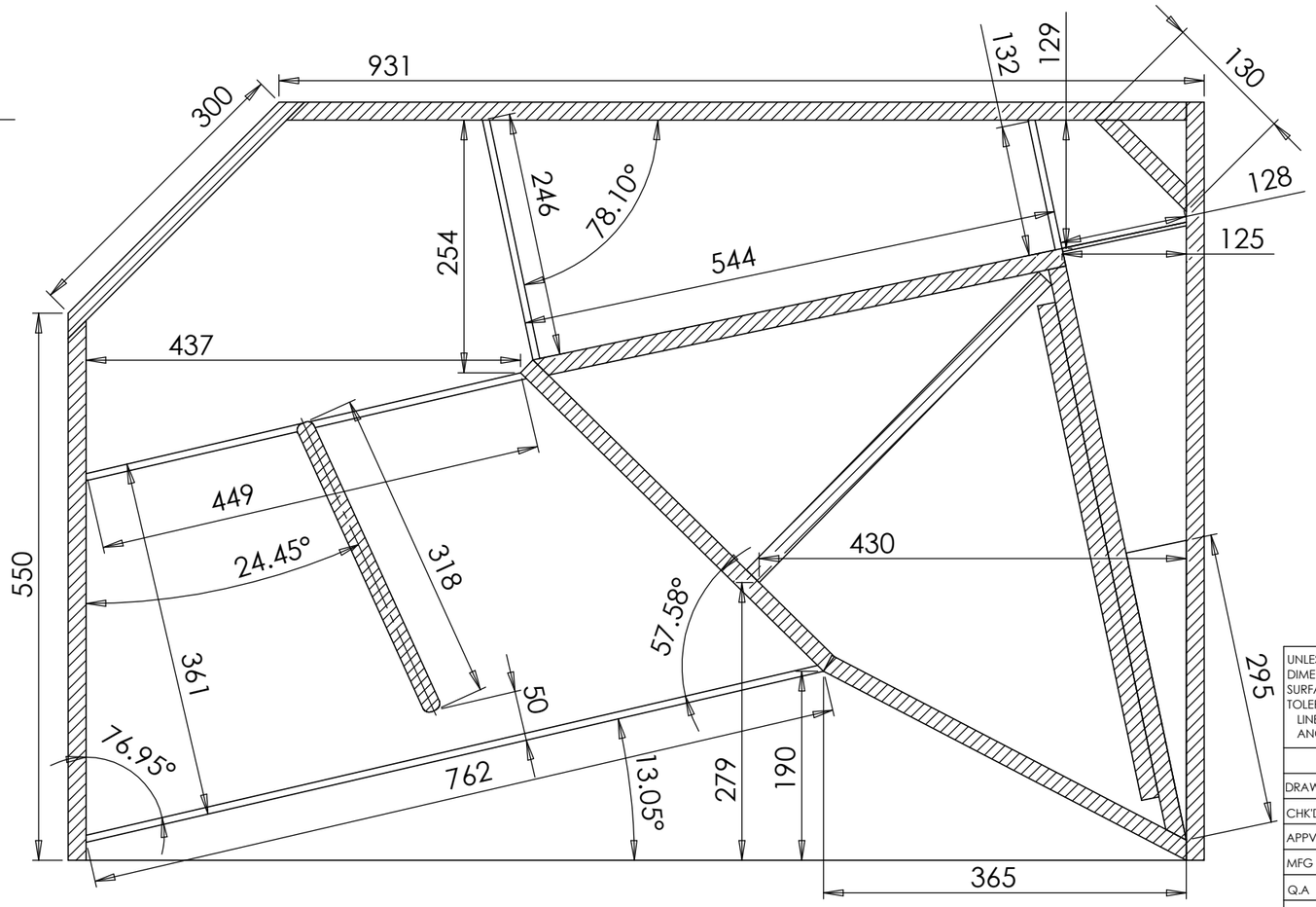

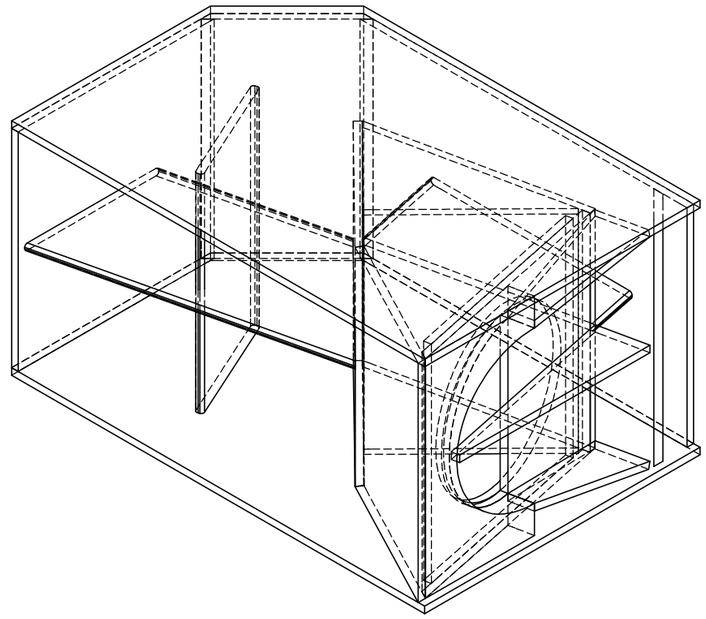

UNLESS OTHERWISE SPECIFIED: DIMENSIONS ARE IN MILLIMETERS SURFACE FINISH: TOLERANCES: LINEAR: ANGULAR:	FINISH:					DEBUR AND BREAK SHARP EDGES
	NAME	SIGNATURE	DATE			
DRAWN	NINELEAVES		04/03/09			
CHK'D						
APPV'D						
MFG						
Q.A				MATERIAL:		
				WEIGHT:		

1:6 SCALE WHIEN PRINTED ON A3

REVISION V1.0

DESIGN REWORK

TITLE:

18" INVADER BIN

DWG NO. 18B600

A3

SCALE:1:10

SHEET 1 OF 1